GCP200GX120HBA2

等效电路原理图　　Equivalent Circuit Schematic

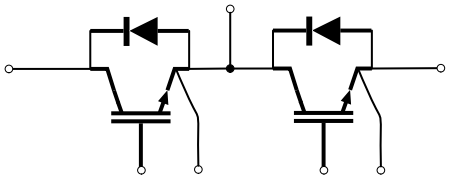



200A/1200V

说明

翠展 IGBT 功率模块具有超低的导通损耗以及良好的短路可靠性。
该产品是为了通用逆变器以及不间断电源等应用所设计。

Description

GRECON IGBT Power Module provides ultra low conduction loss as well as short circuit ruggedness. They are designed for the applications such as general inverters and UPS.

典型应用

- 辅助逆变器
- 医疗应用
- 电机传动
- 伺服驱动器

Typical Applications

- Auxiliary Inverters
- Medical Applications
- Motor Drives
- Servo Drives

电气特性

- 低开关损耗
- 最大结温 175℃
- V_{CEsat} 带正温度系数
- 低 V_{CEsat}

Electrical Features

- Low Switching Losses
- Maximum junction temperature 175℃
- V_{CEsat} with positive Temperature Coefficient
- Low V_{CEsat}

机械特性

- 高功率循环和温度循环能力
- 铜基板
- 焊接技术
- 标准封装

Mechanical Features

- High Power and Thermal Cycling Capability
- Copper Base Plate
- Solder Contact Technology
- Standard Housing

IGBT,逆变器 / IGBT,Inverter

最大额定值 / Maximum Rated Values

Parameter	Symbol	Conditions	Value	Unit
集电极-发射极电压 Collector-emitter voltage	V_{CES}	T_{vj}=25℃	1200	V
连续集电极直流电流 Continuous DC collector current	$I_{C\ nom}$	T_C=90℃, $T_{vj\ max}$=175℃	200	A
集电极重复峰值电流 Repetitive peak collector current	I_{CRM}	t_p=1ms	400	A
总功率损耗 Total power dissipation	P_{tot}	T_C=25℃, $T_{vj\ max}$=175℃	1120	W
栅极-发射极峰值电压 Gate-emitter peak voltage	V_{GES}	T_{vj}=25℃	±20	V

特征值 / Characteristic Values

Parameter	Symbol	Conditions	Value			Unit
			Min	Typ	Max	
栅极阈值电压 Gate threshold voltage	V_{GEth}	V_{GE}=V_{CE}, I_C=3.8mA, T_{vj}=25ºC		5.8	6.4	V
栅极-发射极漏电流 Gate-emitter leakage current	I_{GES}	V_{CE}=0V, V_{GE}=20V, T_{vj}=25 ºC			100	nA
集电极-发射极截止电流 Collector-emitter cut-off current	I_{CES}	V_{CE}=1200V, V_{GE}=0V, T_{vj}=25ºC			1	mA
集电极-发射极饱和电压 Collector-emitter saturation voltage	$V_{CE\ sat}$	I_C=200A, V_{GE}=15V, T_{vj}=25ºC		2.35		V
		I_C=200A, V_{GE}=15V, T_{vj}=125ºC		2.79		
		I_C=200A, V_{GE}=15V, T_{vj}=150ºC		2.90		
内部栅极电阻 Internal gate resistance	R_{gint}	T_{vj}=25ºC		4.17		Ω
栅极电荷 Gate charge	Q_G	V_{GE}=-8V~+15V， V_{CE}=1200V		1.71		uC
输入电容 Input capacitance	C_{ies}	V_{CE}=25V, V_{GE}=0V, f=1MHz, T_{vj}=25ºC		21.06		nF
反向传输电容 Reverse transfer capacitance	C_{res}			0.05		

Parameter	Symbol	Conditions	Value			Unit
			Min	Typ	Max	
开通延迟时间（电感负载） Turn-on delay time , inductive load	$t_{d\,on}$	I_c=200A, V_{CE}=600V R_{gon}=R_{goff}=3.3Ω V_{GE}=-8V/+15V di/dt_{on}=2001A/us dv/dt_{off}=12500V/us T_{vj}=25°C		220.0		ns
上升时间（电感负载） Rise time , inductive load	t_r			80.0		
关断延迟时间（电感负载） Turn-off delay time , inductive load	$t_{d\,off}$			290.0		
下降时间（电感负载） Fall time , inductive load	t_f			150.0		
开通损耗能量（每脉冲） Turn-on energy loss per pulse	E_{on}			18.1		mJ
关断损耗能量（每脉冲） Turn-off energy loss per pulse	E_{off}			13.6		
开通延迟时间（电感负载） Turn-on delay time , inductive load	$t_{d\,on}$	I_c=200A, V_{CE}=600V R_{gon}=R_{goff}=3.3Ω V_{GE}=-8V/+15V di/dt_{on}=1763A/us dv/dt_{off}=10000V/us T_{vj}=125°C		240.0		ns
上升时间（电感负载） Rise time , inductive load	t_r			90.0		
关断延迟时间（电感负载） Turn-off delay time , inductive load	$t_{d\,off}$			340.0		
下降时间（电感负载） Fall time , inductive load	t_f			230.0		
开通损耗能量（每脉冲） Turn-on energy loss per pulse	E_{on}			30.1		mJ
关断损耗能量（每脉冲） Turn-off energy loss per pulse	E_{off}			16.6		
开通延迟时间（电感负载） Turn-on delay time , inductive load	$t_{d\,on}$	I_c=200A, V_{CE}=600V R_{gon}=R_{goff}=3.3Ω V_{GE}=-8V/+15V di/dt_{on}=1697A/us dv/dt_{off}=9375V/us T_{vj}=150°C		240.0		ns
上升时间（电感负载） Rise time , inductive load	t_r			100.0		
关断延迟时间（电感负载） Turn-off delay time , inductive load	$t_{d\,off}$			350.0		
下降时间（电感负载） Fall time , inductive load	t_f			260.0		
开通损耗能量（每脉冲） Turn-on energy loss per pulse	E_{on}			34.9		mJ
关断损耗能量（每脉冲） Turn-off energy loss per pulse	E_{off}			19.0		

Parameter	Symbol	Conditions	Value			Unit
			Min	Typ	Max	
短路数据 SC data	I_{SC}	t_p≤10us, V_{GE}=15V, V_{cc}=800V, V_{CEM}≤1200V, T_{vj}=25ºC		1247		A
		t_p≤8us, V_{GE}=15V, V_{cc}=800V, V_{CEM}≤1200V, T_{vj}=150ºC		1128		A
结-外壳热阻 Thermal resistance,junction to case	R_{thJC}	每个 IGBT / per IGBT			0.134	K/W
外壳-散热器热阻 Thermal resistance,case to heatsink	R_{thCH}	每个 IGBT / per IGBT λ_{grease}=1W/(m • K)		0.045		K/W
在开关状态下温度 Temperature under switching conditions	$T_{vj\ op}$		-40		150	℃

二极管,逆变器 / Diode,Inverter

最大额定值 / Maximum Ratings

Parameter	Symbol	Conditions	Value	Unit
反向重复峰值电压 Repetitive peak reverse voltage	V_{RRM}	T_{vj}=25 °C	1200	V
连续正向直流电流 Continuous DC forward current	I_F		200	A
正向重复峰值电流 Repetitive peak forward current	I_{FRM}	t_p=1ms	400	A
I^2t-值 I^2t-value	I^2t	V_R = 0 V, t_p = 8.3 ms, T_{vj} = 25°C	3000	A^2s

特征值 / Characteristic Values

Parameter	Symbol	Conditions	Value			Unit
			Min	Typ	Max	
正向电压 Forward voltage	V_F	I_F=200A, V_{GE}=0V, T_{vj}=25°C		2.27	2.7	V
		I_F=200A, V_{GE}=0V, T_{vj}=125°C		2.04		
		I_F=200A, V_{GE}=0V, T_{vj}=150°C		1.84		
恢复电荷 Recovered charge	Q_{rr}	I_F=200A, V_R=600V -di$_F$/dt=4047A/us T_{vj}=25°C		25.9		uC
反向恢复峰值电流 Peak reverse recovery current	I_{RM}			188		A
反向恢复损耗（每脉冲） Reverse recovery energy	E_{rec}			9.5		mJ
恢复电荷 Recovered charge	Q_{rr}	I_F=200A, V_R=600V -di$_F$/dt=3616A/us T_{vj}=125°C		64.4		uC
反向恢复峰值电流 Peak reverse recovery current	I_{RM}			280		A
反向恢复损耗（每脉冲） Reverse recovery energy	E_{rec}			22.1		mJ
恢复电荷 Recovered charge	Q_{rr}	I_F=200A, V_R=600V -di$_F$/dt=3483A/us T_{vj}=150°C		81.2		uC
反向恢复峰值电流 Peak reverse recovery current	I_{RM}			307		A
反向恢复损耗（每脉冲） Reverse recovery energy	E_{rec}			28.0		mJ

Parameter	Symbol	Conditions	Value			Unit
			Min	Typ	Max	
结-外壳热阻 Thermal resistance,junction to case	R_{thJC}	每个二极管 / per diode			0.198	K/W
外壳-散热器热阻 Thermal resistance,case to heatsink	R_{thCH}	每个二极管 / per diode λ_{grease}=1W/(m • K)		0.066		K/W
在开关状态下温度 Temperature under switching conditions	$T_{vj\ op}$		-40		150	℃

负温度系数热敏电阻 / NTC-Thermistor

特征值 / Characteristic Values

Parameter	Symbol	Conditions	Value			Unit
			Min	Typ	Max	
额定电阻值 Rated resistance	R_{25}			5		kΩ
R100 偏差 Deviation of R100	ΔR/R	T_c=100℃, R_{100}=493.3Ω	-5		5	%
耗散功率 Power dissipation	P_{25}				20	mW
B-值 B-value	$B_{25/50}$	$R_2=R_{25exp}[B_{25/50}(1/T_2-1/(298.15K))]$		3380		K

模块 / Module

特征值（除非另有说明，否则 T_c=25°C）

Characteristic Values (T_c=25°C unless otherwise specified)

Parameter	Symbol	Conditions	Value			Unit
			Min	Typ	Max	
绝缘电压 Isolation voltage	V_{isol}	RMS,t=1min, f=50Hz	2500			V
最大结温 Maximum junction temperature	T_{jmax}				175	°C
在开关状态下温度 Operating junction temperature	$T_{vj\ op}$		-40		150	°C
储存温度 Storage temperature	T_{stg}		-40		125	°C
杂散电感（模块） Stray inductance module	L_{CE}				20	nH
外壳-散热器热阻 Thermal resistance,case to heatsink	R_{thCH}	每个模块 / per module λ_{grease}=1W/(m·K)		0.01		K/W
模块安装扭矩 Mounting torque for module mounting	M	M6 螺丝（底板到散热器） Screw M6 baseplate to heatsink	3.0		6.0	N.m
模块重量 / Weight of module	G			290		g

电气特性（曲线）/ Electrical Characteristics (curves)

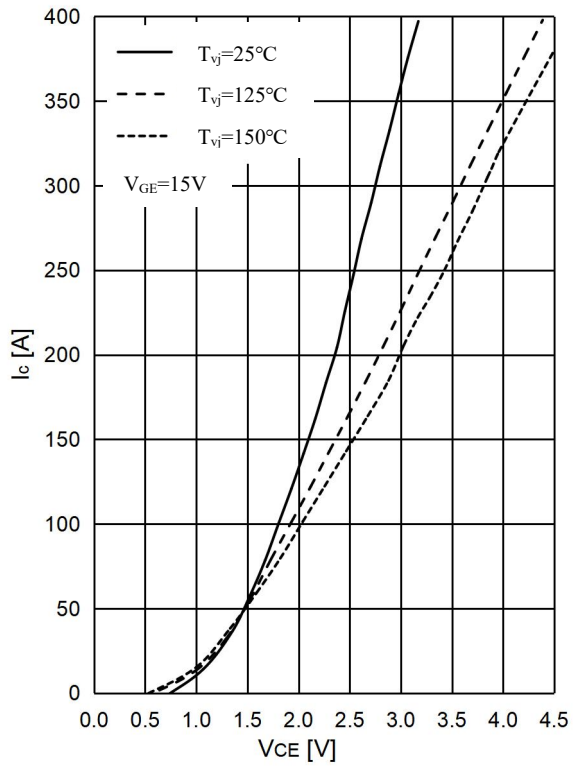

图 1 . IGBT 输出特性,逆变器

Fig 1. IGBT Output Characteristic,Inverter

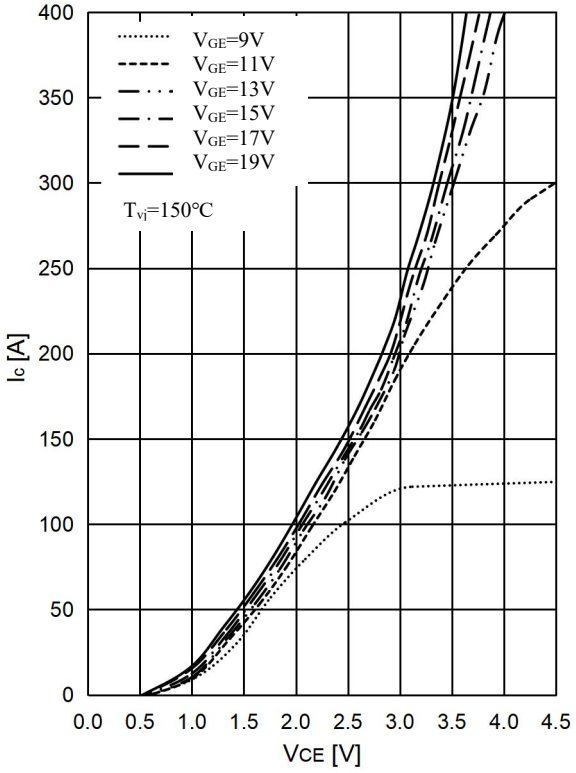

图 2 . IGBT 输出特性,逆变器

Fig 2. IGBT Output Characteristic,Inverter

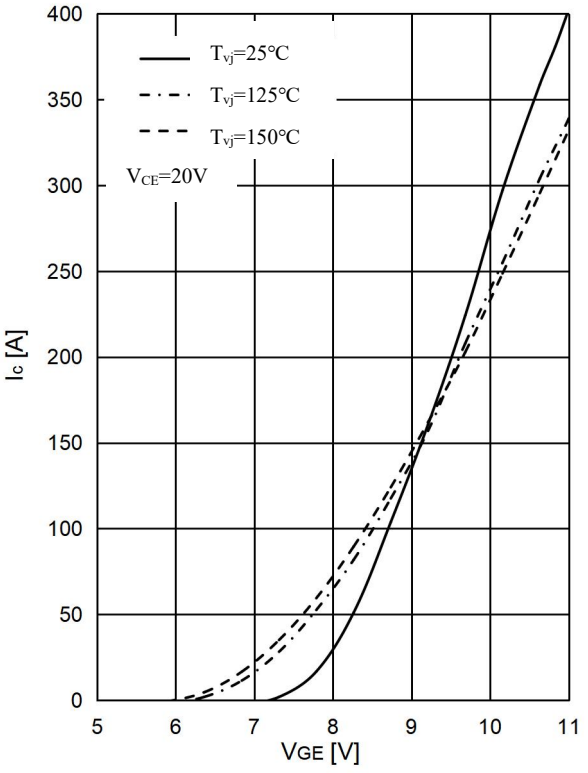

图 3 . IGBT 转移特性,逆变器

Fig 3. IGBT Transfer Characteristic,Inverter

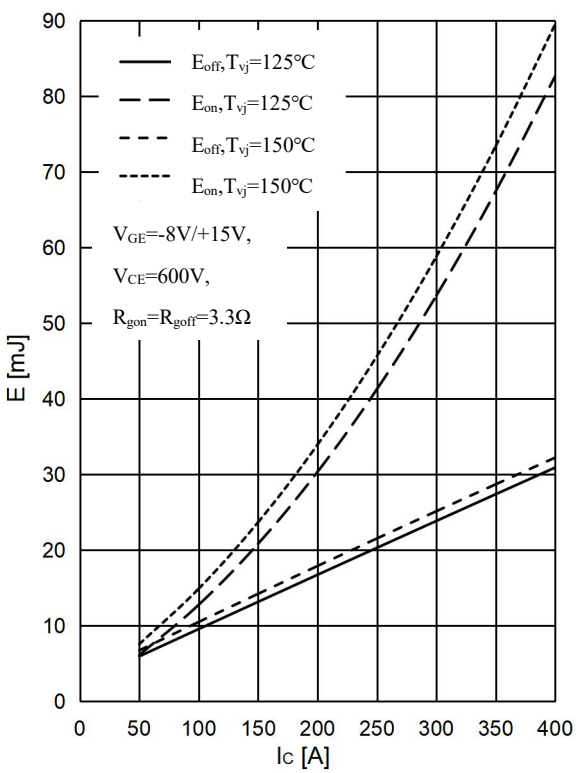

图 4 . IGBT 开关损耗-集电极电流,逆变器

Fig 4. IGBT Switching Loss E_{on} & E_{off} vs. I_C,Inverter

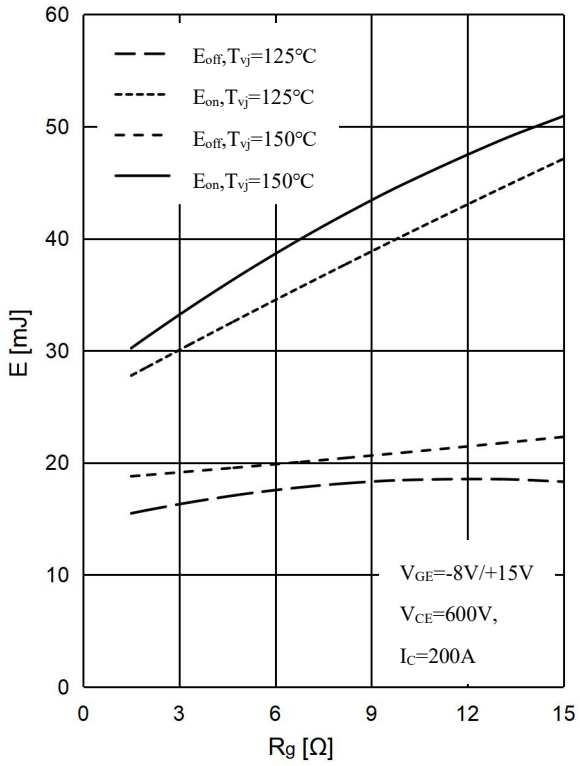

图 5 . IGBT 开关损耗-栅极电阻,逆变器

Fig 5. IGBT Switching Loss E_{on} & E_{off} vs. R_G,Inverter

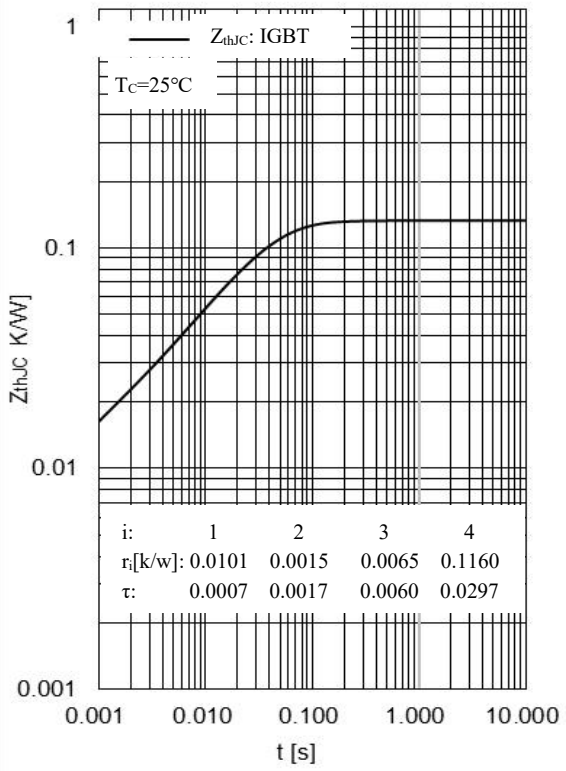

图 6 . IGBT 瞬态热阻抗,逆变器

Fig 6. IGBT Transient thermal impedance,Inverter

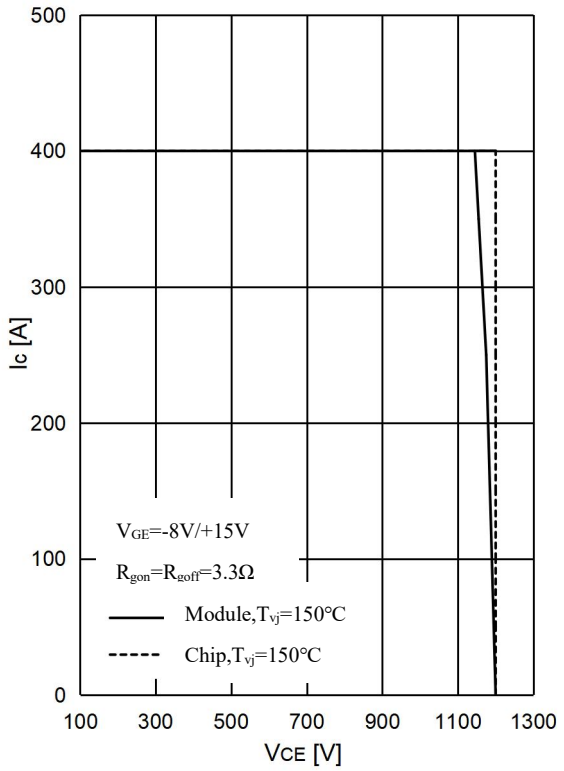

图 7 . IGBT 反偏安全工作区,逆变器

Fig 7. IGBT RBSOA,Inverter

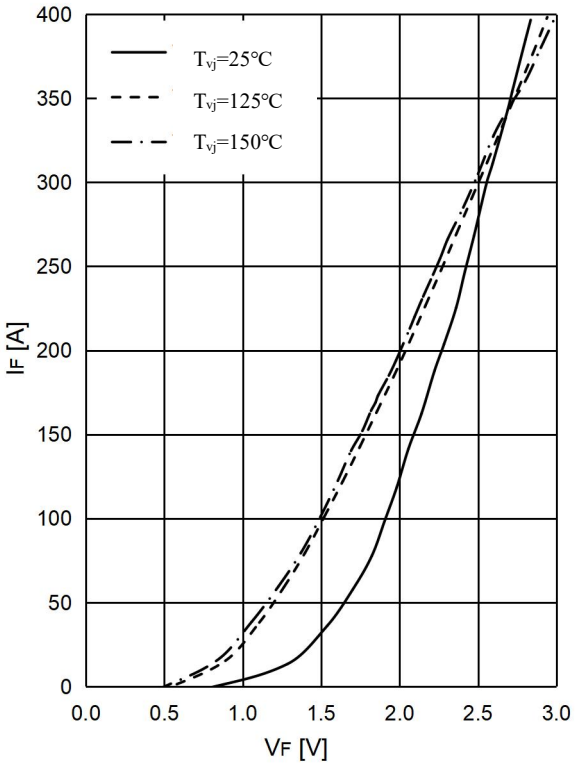

图 8 . 二极管 正向偏压特性,逆变器

Fig 8. Diode Forward characteristic,Inverter

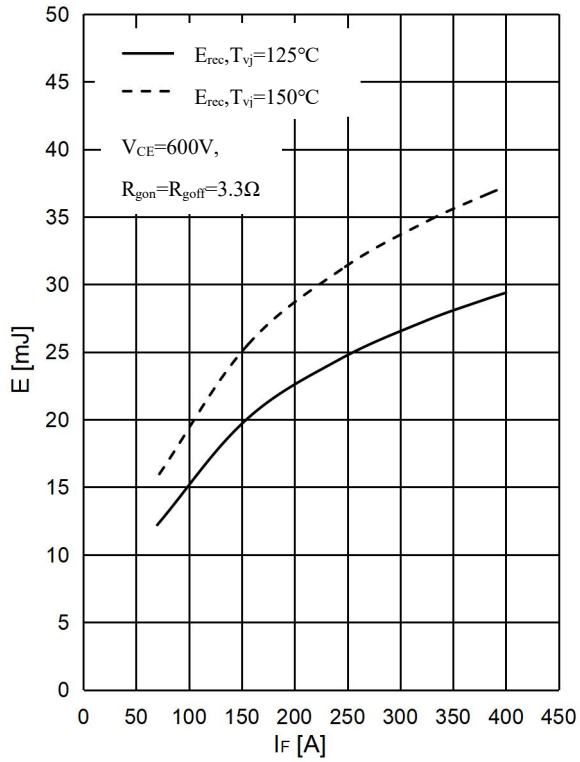

图 9．二极管 开关损耗-正向电流,逆变器

Fig 9. Diode Switching Loss E_{rec} vs. I_F,Inverter

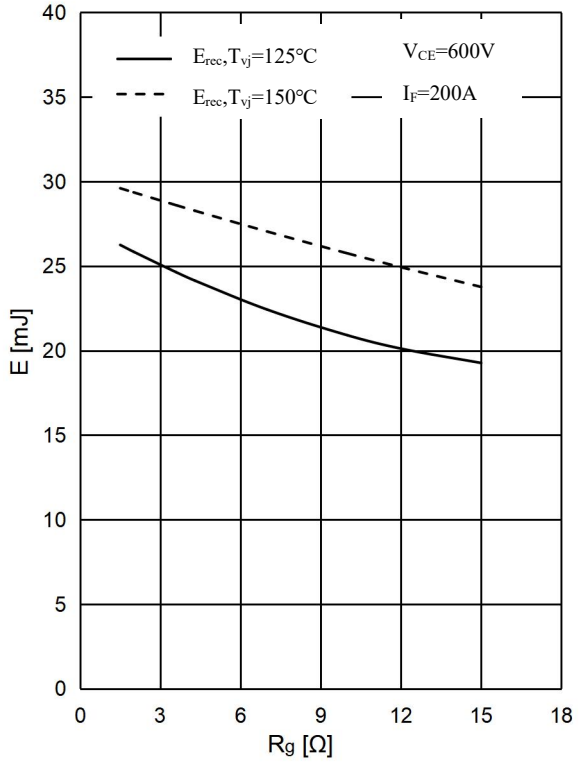

图 10．二极管 开关损耗-栅极电阻,逆变器

Fig 10. Diode Switching Loss E_{rec} vs. R_G,Inverter

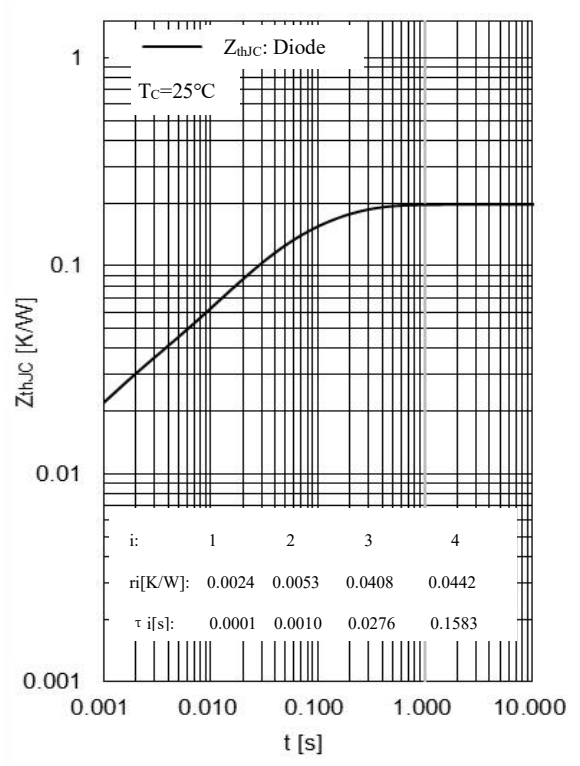

图 11．二极管 瞬态热阻抗,逆变器

Fig 11. Diode Transient thermal impedance,Inverter

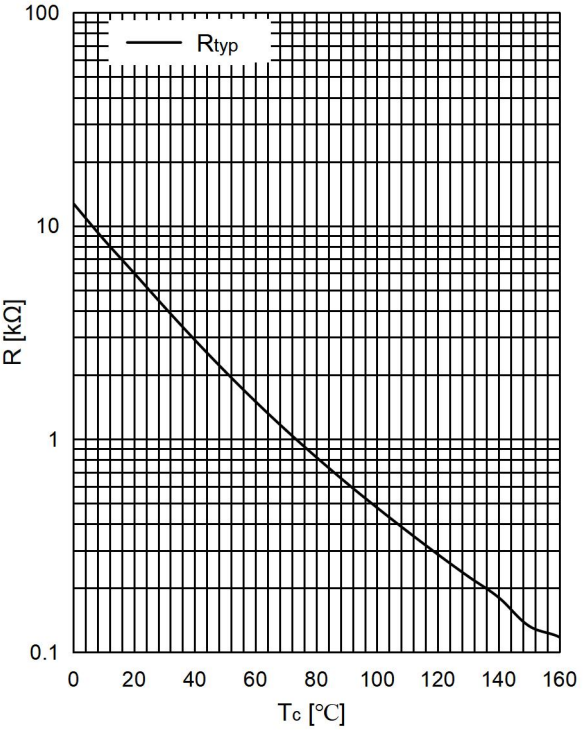

图 12．负温度系数热敏电阻 温度特性

Fig 12. NTC-Thermistor-temperature characteristic

电路图 / Circuit Diagram

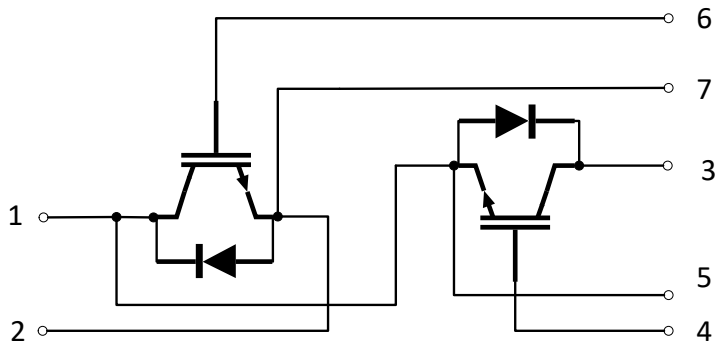

封装尺寸 / Package Dimensions

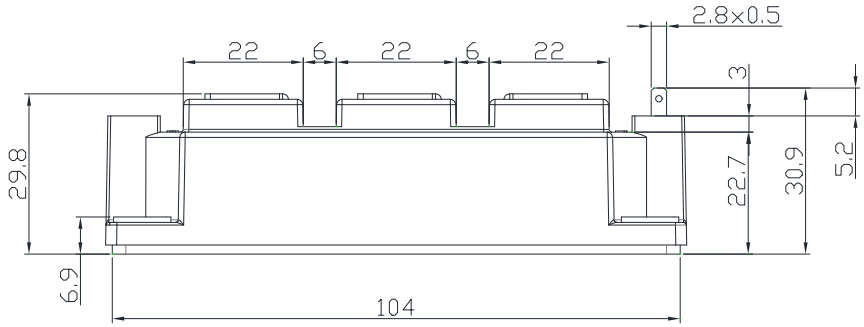

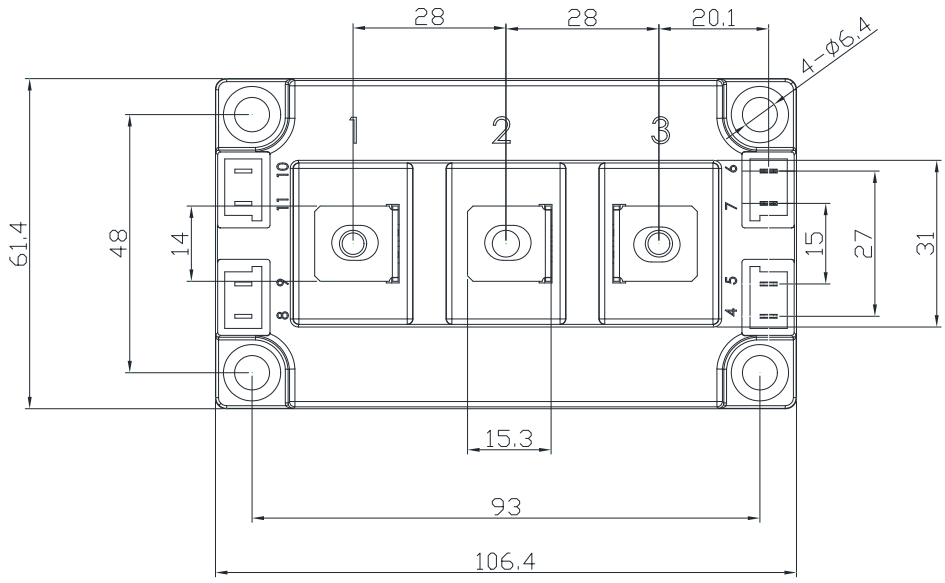

使用条件和条款:

本产品规格书中提供的一部分产品数据是产品的典型值，实际出厂测试的产品数据可能与典型值略有偏离，但我公司保证这些偏离不会影响产品的正常使用。如果产品信息发生变更，我公司会及时修订产品规格书，请随时关注我公司网站发布的产品手册信息。如果您有超出规格书所提供的产品信息的要求或者对我们的产品针对的特殊应用有疑虑的话，请联系我们负责您的销售部门(详情请查询 www.grecon-semi.com)。对那些特别感兴趣的问题我们将提供相应的应用手册。由于技术需要，我们的产品可能含有危险物质。如果需要查询类似问题请联系我们负责您的销售部门。产品使用过程中，如有超出产品数据手册中所定义的产品极限温度、电压、电流或安全工作区范围的情况，我公司无法保证产品的应用可靠性。产品在使用时，严禁触碰。产品断电后，在确保无电荷残留、产品已冷却后，才可以在有静电防护措施的情况下触碰产品。如果您想将我们的产品用于航天，健康，危及生命或者生命维持等应用，请申明。

请注意，对这类应用我们强烈建议：

- 执行风险和质量评估；
- 签订质量协议；
- 进行规定的测试和产品出厂检查，我们可以根据测试的实际情况供货；

如果有必要，请根据实际需要将类似的说明给您的客户。我们将保留产品规格书的修改权。

Terms & Conditions of usage

Some product data in the datasheet of this product are the typical values, the actual factory testing data may deviate slightly from typical values, but our company guarantees that these deviations will not affect the normal use of the product. If the product information changes, our company will promptly amend the datasheet, please keeps your attention to product information changing in our company website. Should you require product information in excess of the data given in this product data sheet or which concerns the specific application of our product, please contact the sales office, which is responsible for you (see www.grecon-semi.com). For those that are specifically interested we may provide application notes. Due to technical requirements our product may contain dangerous substances. For information on the types in question please contact the sales office, which is responsible for you. During the application, if the working conditions are beyond the limitation of temperature, voltage, current or safe operating area of the product defined in the product datasheet, our company cannot guarantee the reliability of the product.When the products are in use, it is strictly prohibited to touch. After power off, to ensure that there is no residual charge and the products have been cooled before they can be touched. And all operations must be under ESD protection measures.

Should you intend to use the Product in aviation applications, in health or live endangering or life support applications, please notify. Please note, that for any such applications we urgently recommend :

- to perform joint Risk and Quality Assessments;
- the conclusion of Quality Agreements;
- to establish joint measures of an ongoing product survey, and that we may make delivery depended on the realization of any such measures.

If and to the extent necessary, please forward equivalent notices to your customers. Changes of this product data sheet are reserved.